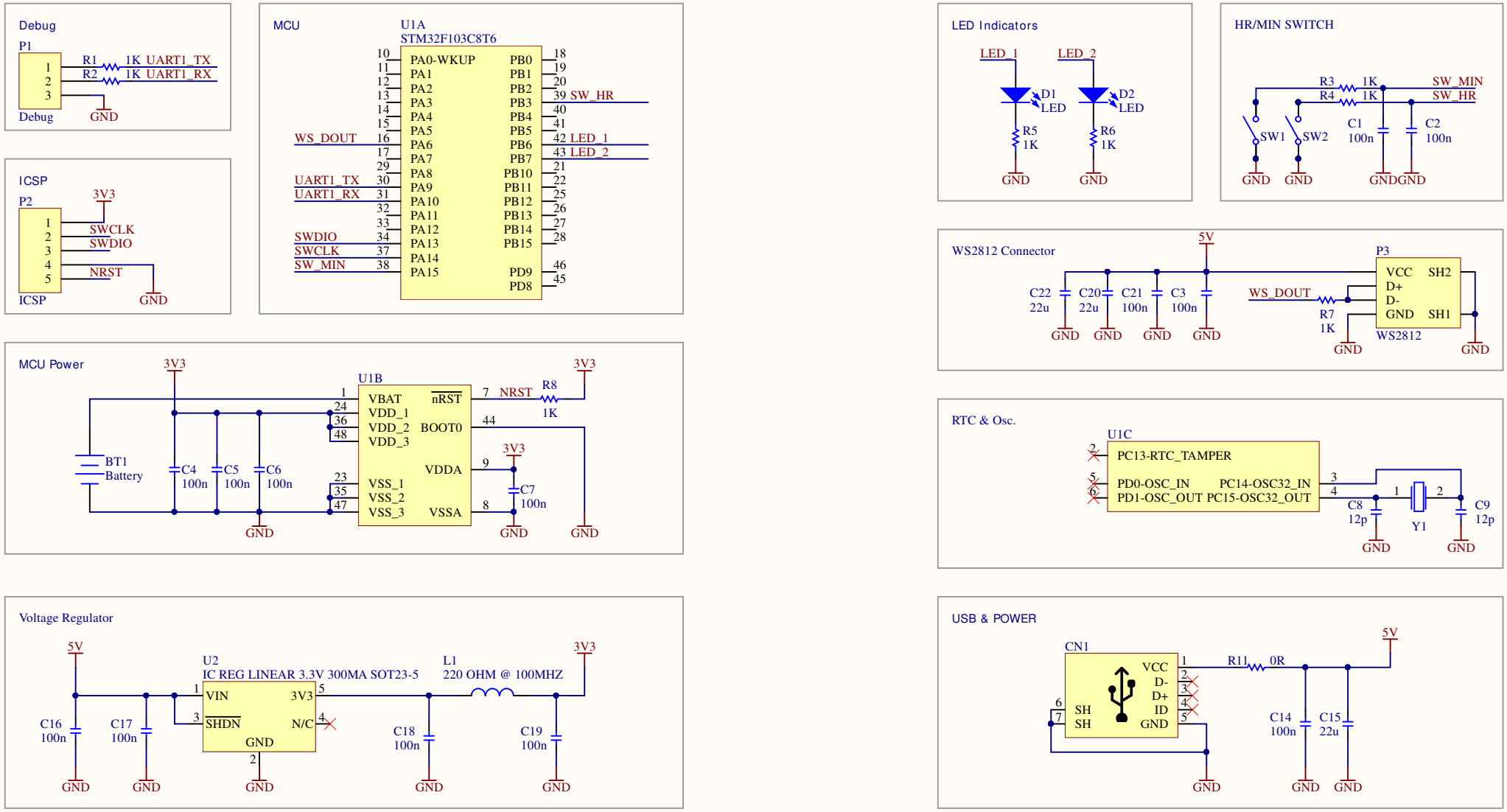

Title: MCU		*Sasa Karanovic*
Project: Iris Clock	Version: R01	*Project available at sasakaranovic.com*
Date: 2018-10-28 Time: 01:34:54	Sheet 1 of 1	SASA KARANOVIC